8T steering drive axle

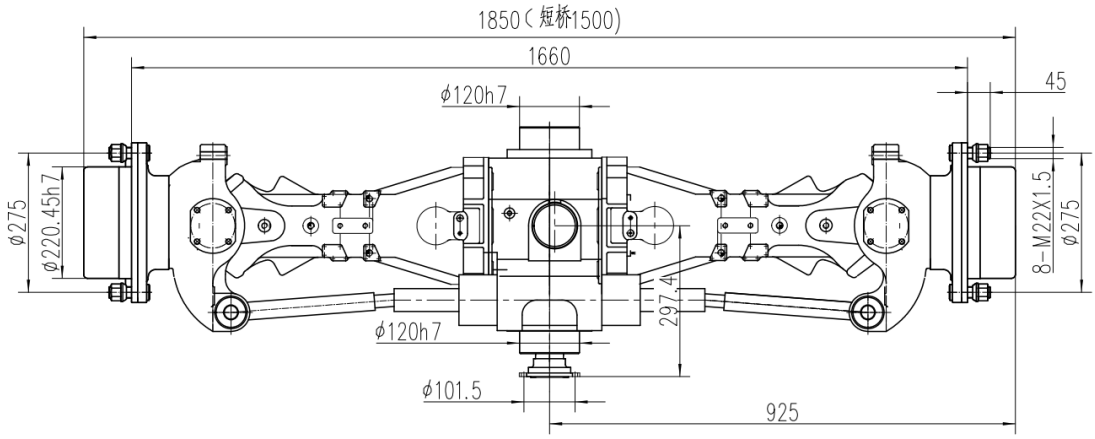

The 8T steering drive axle made in China can replace the American Dana 212 axle, and the internal parts of the axle are common

Product performance parameter table

Parameter	Unit	Value
Service braking torque	N. m	21000
Brake pressure	M pa	8
Maximum steering pressure	M pa	14 (overload 18)
Main reducer speed ratio		2.286:1
Speed ratio of wheel reducer		6 :1
Overall speed ratio		13.714:1
Maximum static bearing capacity	N	160000
Maximum dynamic bearing capacity	N	80000
Maximum input torque	N. m	3800